NJITSU

"Efficient, Flexible, and Collaborative Automation"

Welding Robot

nFA-RH14-10-W

FUNCTIONAL FEATURES

- The arm span is 1.4 meters. The design is highly compact and can be flexibly installed on the ground or upside down.
- With large working space, fast running speed and high repeated positioning accuracy, it is suitable for wide range of welding applications.
- The safety emergency stop board independent of the control system is equipped with, and the safety relay circuit is adopted to provide double-circuit emergency stop to ensure the reliability of emergency stop.
- The robot body adopts highly flexible special cable.
- Built-in three-phase transformer makes 380V and 220V isolated to help the power supply more stable. Built-in three-phase filter can effectively improve the performance of EMC and EMI.
- Highly flexible welding cable is built-in.
- The robot body is with dual-circuit gas pipe to meet the welding demand.
- The inner diameter of 6-axis middle hole is 44mm, it can meet the installation

Arm form		Vertical multiple joints
Degree of freedom		6 axis
Maximum payload		10kg
Repeated positioning accuracy		±0.08mm
Maximum reaching distance		1454mm
Robot body weight		170kg
Installation mode		Ground, upside down mounting, wall mounting
Maximum travel	axis 1	Ground/upside down mounting -167°-167°, wall mounting -30°-30°
	axis 2	-155°-90°
	axis 3	-175°-240°
	axis 4	-190°-190°
	axis 5	-105°-130°
	axis 6	-210°-210°
Maximum speed	axis 1	169°/S
	axis 2	169°/S
	axis 3	169°/S
	axis 4	301°/S
	axis 5	220°/S
	axis 6	743°/S
Allowable torque	axis 4	20N.m
	axis 5	20N.m
	axis 6	11N.m
Allowable moment of inertia	axis 4	0.5kg.m²
	axis 5	0.5kg.m²
	axis 6	0.16kg.m²
Installation environment	ambient temperature	0-45°C
	relative humidity	20-80%(No condensation)
	vibration	Under 0.5 G
	Others	Robot installation must be away from: Flammable or corrosive liquids or gases, electrical sources of interference
IP level		Body IP54 , wrist IP67
Advantage features		Compact structure, high speed, high precision, high expansibility and easy operation
Application		Welding
Electric Cabinet Configuration		C9

INSTALLATION INTERFACE DIAGRAM

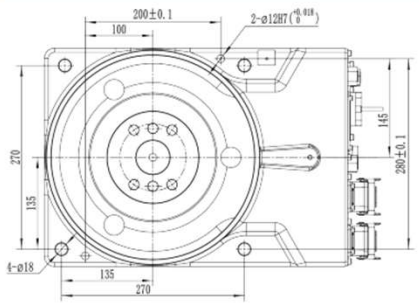

Installation Dimension of Base

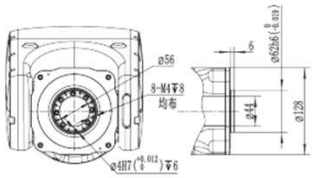

Flange Dimensions
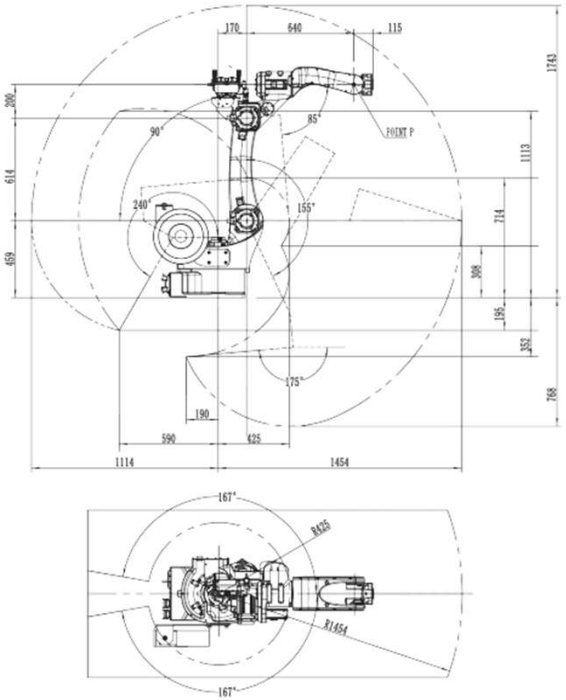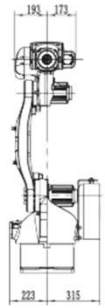
MOTION RANGE DIAGRAM