NJITSU

"Efficient, Flexible, and Collaborative Automation"

Welding Robot

FUNCTIONAL FEATURES

- The arm span is nearly 2.0 meters. The design is highly compact and can be flexibly installed on the ground or upside down.
- With large working space, fast running speed and high repeated positioning accuracy, it is suitable for wide range of welding applications.
- The safety emergency stop board independent of the control system is equipped with, and the safety relay circuit is adopted to provide double-circuit emergency stop to ensure the reliability of emergency stop.
- The robot body adopts highly flexible special cable.
- Built-in three-phase transformer makes 380V and 220V isolated to help the power supply more stable. Built-in three-phase filter can effectively improve the performance of EMC and EMI.
- The robot body is with dual-circuit gas pipe to meet the welding demand.
- The inner diameter of 6-axis middle hole is 44mm, it can meet the installation requirements of water-cooling torch and bellows torch.
- Highly flexible welding cable is built-in.

Arm form		Vertical multiple joints
Degree of freedom		6 axis
Maximum payload		6kg
Repeated positioning accuracy		±0.08mm
Maximum reaching distance		2012mm
Robot body weight		291kg
Installation mode		Ground, upside down mounting, wall mounting
Maximum travel	axis 1	Ground/upside down mounting -165°~165°, wall mounting -30°~30°
	axis 2	-155°~100°
	axis 3	-165°~245°
	axis 4	-190°~190°
	axis 5	-105°~110°
	axis 6	-210°~210°
Maximum speed	axis 1	160°/S
	axis 2	160°/S
	axis 3	169°/S
	axis 4	301°/S
	axis 5	338°/S
	axis 6	535°/S
Allowable torque	axis 4	16N.m
	axis 5	16N.m
	axis 6	13N.m
Allowable moment of inertia	axis 4	0.55kg.m²
	axis 5	0.55kg.m²
	axis 6	0.2kg.m²
Installation environment	ambient temperature	0~45°C
	relative humidity	20~80%(No condensation)
	vibration	Under 0.5 G
	Others	Robot installation must be away from: Flammable or corrosive liquids or gases, electrical sources of interference
IP level		Body IP54 , wrist IP67
Advantage features		Compact structure, high speed, high precision, high expansibility and easy operation
Application		Welding
Electric Cabinet Configuration		G9

nFA-RH20-06-W

INSTALLATION INTERFACE DIAGRAM

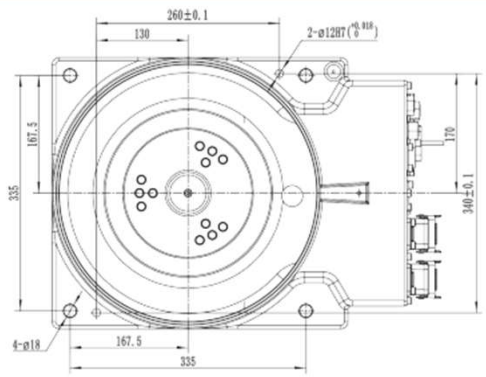

Installation Dimension of Base

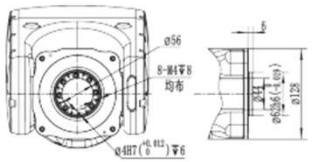

Flange Dimensions
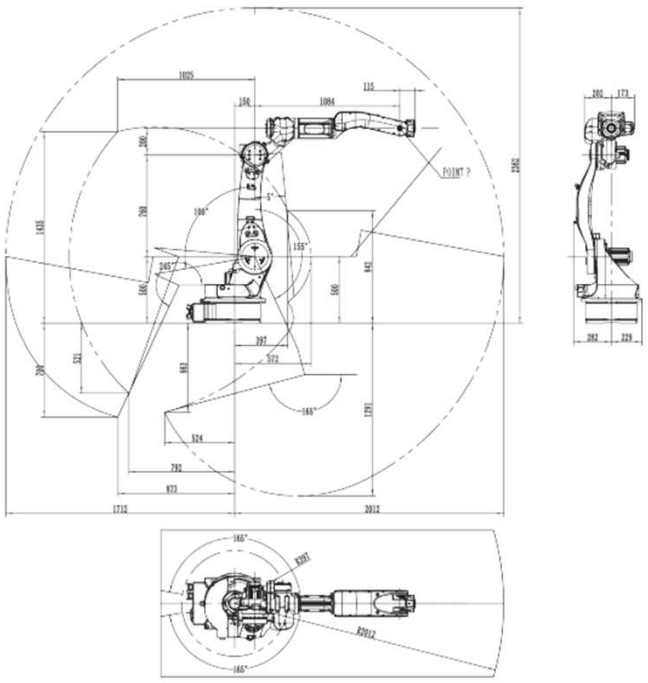
MOTION RANGE DIAGRAM