NJITSU

"Efficient, Flexible, and Collaborative Automation"

Scara Robot

nFA-RA04-03Z17

FUNCTIONAL FEATURES

- Compact and flexible structure, fast running speed, high transmission accuracy and low noise£»
- Highly rigid arm design realizes high load and high speed in one package£»
- Available in 600 and 400 mm arm span; 3kg or 6kg payload£»
- Suitable for handling, palletizing, assembly, 3C and other application fields.

Function		Material handling, 3C
Total axes		4
Maximum reach		400mm
Payload	Rated load	1kg
	Maximum load	3kg
Permissible inertial torque of rotating axis	Rated load	0.005kg.m²
	Maximum load	0.05kg.m²
Repeated positioning accuracy	1st axis + 2nd axis	±0.01mm
	3rd axis (elevating axis)	±0.01mm
	4th axis (rotation axis)	±0.01 °
Max speed	1st axis	7791mm/s
	2nd axis	7791mm/s
	3rd axis (elevating axis)	1000mm/s
	4th axis (rotation axis)	2500 °/s
Max operating area	1st axis	±132 °
	2nd axis	±141 °
	3rd axis (elevating axis)	170mm
	4th axis (rotation axis)	±360 °
Installation method		Floor mounted
Robot body weight		13Kg
Power consumption		0.7kw
Installation environment	Temperature	0~40°C
	Humidity	20~80% RH(no condensation)
	Vibration	Under 4.9M/S²
Electric Cabinet Configuration		G12B

MOTION RANGE DIAGRAM

CRP-RS04-03Z17

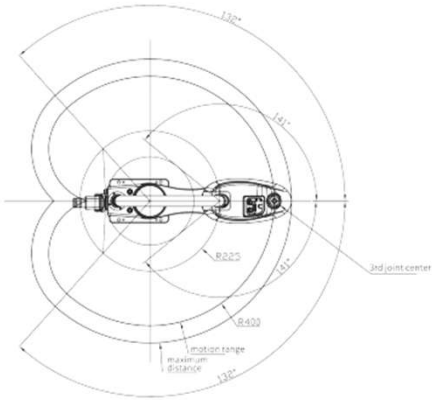

INSTALLATION INTERFACE DIAGRAM
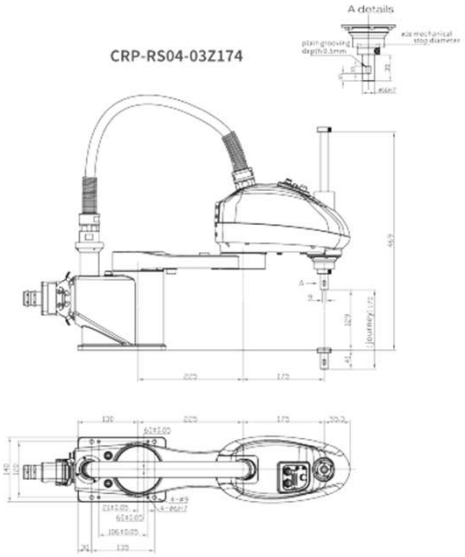
CRP-RS04-03Z174