NJITSU

"Efficient, Flexible, and Collaborative Automation"

Handling Robots

nFA-RH20-12

FUNCTIONAL FEATURES

- The design of the robot is highly compact, which is more lightweight, especially the wrist is slender, so it can be applied in more scenarios.
- Adopt high speed motor, the robot has high rigidity and faster beat.
- Adopt leak-proof structure, the protection class of robot is up to IP 67 to adapt harsher working environment.
- The robot in the axes of J2 J3 J4 is reserved installation holes to install fixed solenoid valve and other accessories. There are IO port and dual-circuit gas pipe at J3 axis to meet the handling application.
- Driving adopts new advanced PID control technology to achieve faster response; With the functions of observer dynamic compensation and weak magnetism, the electric machine can be better controllable and more stable with higher speed.
- The new control algorithm combines Kinematics with Dynamics. The new design integrates driven algorithm and control algorithm to realize automatic programming and guarantee the service life of mechanical under the maximum working capacity based on the characteristics of mechanical components load and condition of loading. Meanwhile, the robot can realize high speed response, faster running speed and work beats with longer life span.
- With collision detection function, it can better protect the robot body and peripheral equipment; With the function of gravity compensation, the robot has higher precision, so it can be applied in more scenarios.
- Equipped with safety emergency stop board which is independent of the control system, and the safety relay circuit is adopted to provide double-circuit emergency stop to ensure the reliability of emergency stop.
- Built-in three-phase transformer makes 380V and 220V isolated to help the power supply more stable. Built-in three-phase filter can effectively improve the performance of internal and external distractions.

Arm form		Vertical multiple joints
Degree of freedom		6 axis
Maximum payload		12kg
Repeated positioning accuracy		±0.08mm
Maximum reaching distance		2015mm
Robot body weight		262kg
Installation mode		Ground, upside down mounting, wall mounting
Maximum travel	axis 1	Ground/upside down mounting :170°~170°, wall mounting -30°~30°
	axis 2	-50°~170°
	axis 3	-80°~145°
	axis 4	-190°~190°
	axis 5	-135°~135°
	axis 6	-360°~360°
Maximum speed	axis 1	170°/S
	axis 2	170°/S
	axis 3	200°/S
	axis 4	350°/S
	axis 5	350°/S
	axis 6	540°/S
Allowable torque	axis 4	52N.m
	axis 5	52N.m
	axis 6	32N.m
Allowable moment of inertia	axis 4	2.3kg.m²
	axis 5	2.3kg.m²
	axis 6	1.2kg.m²
Noise level		<70dB(A)*
Installation environment	ambient temperature	0~45°C
	relative humidity	20~80%(No condensation)
	vibration	Under 0.5 G
	Others	Robot installation must be away from Flammable or corrosive liquids or gases,electrical sources of interference
IP level		Wrist Ip67 ,others IP54
Advantage features		Compact structure, high speed, high precision, high expansibility and easy operation
Application		Cutting, assembly, handling, marking, polishing
Electric Cabinet Configuration		C9A

INSTALLATION INTERFACE DIAGRAM

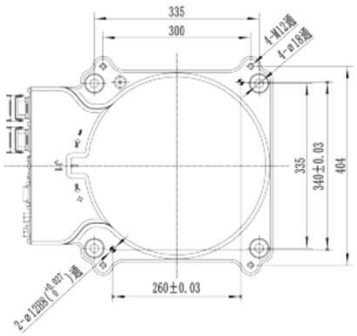

Installation Dimension of Base

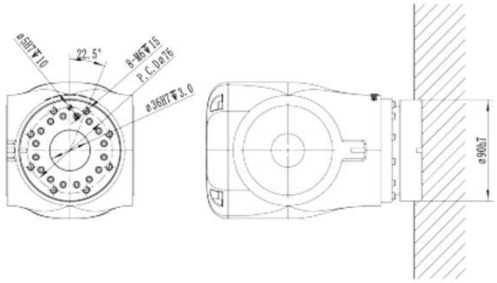

Flange Dimensions
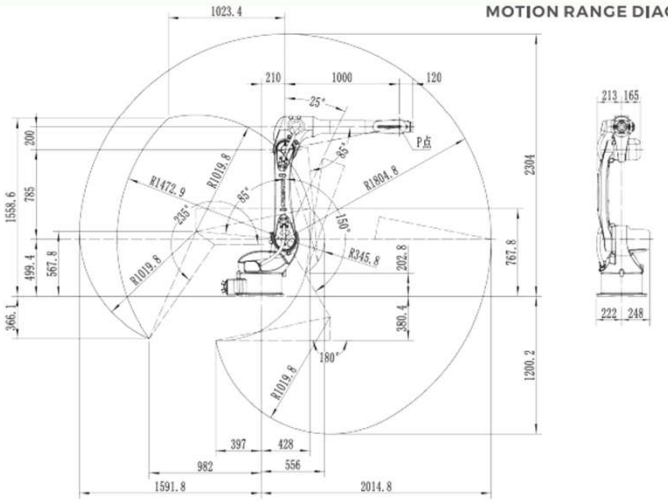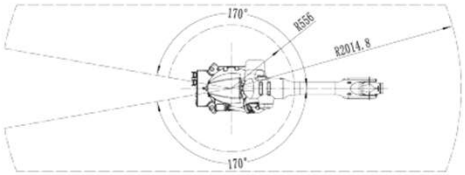
MOTION RANGE DIAGRAM